- Sapphire bedded turbines for serial applications
- Insertion turbines for blocks and fittings
- OEM turbines for potable water applications
- Stainless steel turbine with flanged or threaded connection

TURBINE FLOW SENSORS

Contains products with:

WRAS
Water Regulations Advisory Scheme

DB_Turbine_flow_sensors 05/2014

Sapphire bedded turbines for serial applications

Durable and immune to interference!

Measuring principle

The liquid flowing into the turbine flow sensor is split into individual jets by the guiding blade. These jets hit the rotor evenly from different directions, setting the rotor in motion. The rotation speed of the rotor is then converted to an electrical pulse signal (frequency): The rotors are fitted with magnets and a Hall effect sensor detects the rotation of the rotor. The VTI series has stainless steel pins in the rotor. An inductive proximity switch detects the rotor rotation.

In both cases, a flow-proportional frequency signal (square-wave signal) is made available.

Given the uniform inflow to the bearing, the forces largely cancel themselves out and wear is reduced to a minimum. The extremely hard bearing materials - sapphire and tungsten carbide - also guarantee an exceptionally long endurance.

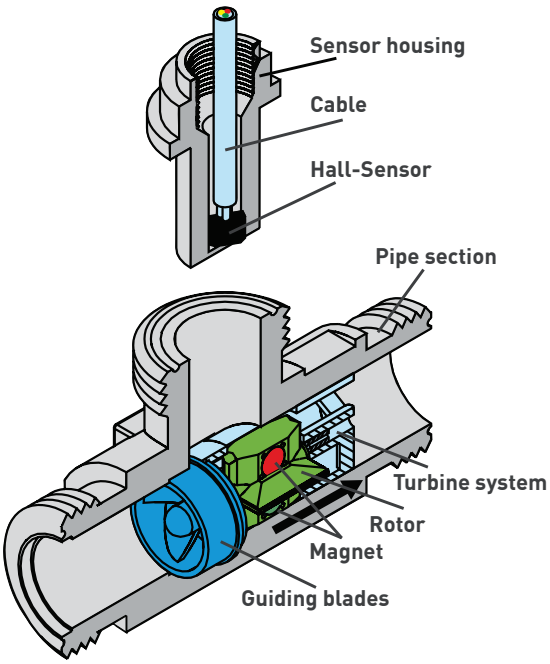

Turbotron VT series

The turbine flow sensors of the product line Turbotron are sensors for flow measurement or dosing applications for liquids. Because of the very compact design, the very wide measuring range and the convincing precision of measurements, the Turbotron has almost unlimited applications. Depending on the ordered version, the Turbotron is available with nominal diameters DN 15, DN 20, DN 25 and DN 40.

Advantages

Universal application thanks to :

- Fixed pulse rate, thus practically no serial deviation
- Wide measuring range from 1:20 to 1:42 (depends on model), therefore universally applicable
- High degree of accuracy ensures reliable measurement results
- High quality sapphire bearing, low abrasion and extremely long running period
- Specially designed guiding blades ensures uniform flow to the rotor from four sides, thus tremendous reduction of wear
- Any position can be versatile installed
- Permanent operating temperatures up to 150 °C (VTP version)
- Compact dimensions
- Proven in numerous OEM-applications
- Service-friendly
- Long endurance
- Temperature measurement can be integrated (option)

Flexible and perfectly equipped

Thanks to different arrangements:

- Plastic, brass and stainless steel types
- Plug connector or fixed connecting cable
- With reinforced bearings for extended life expectancy
- Special bearings for low flow rates (option)

Series Turbotron VT, options

Turbine Flow Transmitter, Turbotron AI

Type Turbotron AI

Instead of the pulse signal, an analogue current signal 4...20 mA is provided by installing an internal transducer onto the flow sensors described before.

Technical data	
Output signal	4...20 mA
Accuracy	±1.25 % of reading*
Current limit	Approx. 26 mA
Scaling	Different flow ranges, see order code flow sensor other scaling possible from 10 pieces and above
Power supply	18...30 VDC
Max. current consumption	30 mA
Max. burden	250 Ω against GND
Residual ripple	0.2 mA ss over the entire range
Type	3 wire, galvanically not separated, common GND of power supply and output signal
Electrical connection	4 pin plug connector, M12 x 1
Max. medium temperature	Dependent on the maximum temperature of the applied flow sensor, not exceeding 80 °C
Casing material	Plastic PA, brass with VTM
Order code	Please, order through selection in the order codes on pages 71, 82 and 88

* Additionally to respective accuracy of turbine flow sensor

Turbine Flow Switch with switched output, Turbotron VE

Advantages

- Very wide set point range, thus one flow switch suitable for any applications
- Fail safe (locked rotor is recognized as "water lack")
- Precise set point adjustment
- Optical signaling by 2 LEDs, yellow = flow, red = flow lack
- Safe monitoring of smallest volume flows

Type VT..15..VE

If you make exceptionally high requirements on monitoring of liquid flow, the SIKA turbine flow switch will be the correct selection.

Its areas of application: Monitoring of cooling circuits of high-quality equipment like laser installations or HF generators. It avoids costly consequential damages resulting from overheating. A great number of different applications is covered by a very simple and exact selection of the set point. As an option, a pulse signal is also available in addition to the switching output (contact). In such a case, in addition to safe monitoring, a continuous or temporary measurement of the flow (e.g. for adjustment jobs) can also be carried out.

The core of the turbine flow switch is the extremely durable flow sensor SIKA-Turbotron which for years successfully demonstrated its reliability in many mass applications. It provides a flow-proportional frequency signal which is introduced to a microprocessor. This monitors the adjusted minimum flow and activates the electrically insulated alarm contact in the case of dwindling flow.

Even a due blocking of the turbine system is clearly recognized and reliably signaled. The adjustment of the set point can be carried out very easy and precisely. By means of a 16-position rotary switch (catching), the desired set point is selected.

Technical data

Technical data	
Set point range (with decreasing flow) / accuracy	**DN 15** 0.5...29.5 l/min / ±2 % of set point + accuracy of turbine flow sensor **DN 25** 3...100 l/min / ±4 % of set point + accuracy of turbine flow sensor **DN 40** 7...275 l/min / ±6 % of set point + accuracy of turbine flow sensor
Set point adjustment	16 different set points selectable by means of a 16-position rotary switch
Output / max. contact rating	**Only switching output:** Electrically insulated contact, opens in the case of lack of flow Max. contact rating 125 VAC / DC, 100 mA **Switching output and pulse output** Switching output against power supply Max. contact rating 100 mA Pulse output: flow-proportional frequency signal NPN, max. 100 mA
Switching hysteresis	0.5 l/min (DN 15) 2...5 l/min (DN 25) 3...35 l/min (DN 40)
Power supply	12...24 VDC
Current consumption	Max. 25 mA
Degree of protection	IP54 with closed sleve and connected socket
Casing	Plastic PA, transparent
Display, internal	LED yellow = ok (flow) LED red = alarm (lack of flow)
Max. medium temperature	Dependent on the maximum temperature of the used flow sensor, not exceeding 80 °C
Electrical connection	4 pin plug connector, M12 x 1
Order code	Please order by a the corresponding selection in the order code on pages 71, 82 and 88

Set point tables

VT..15..VE (DN 15)																
Switch position	0	1	2	3	4	5	6	7	8	9	A	B	C	D	E	F
Set point decreasing flow (l/min)*	0.5	1.0	1.5	2.0	2.5	3.0	3.5	4.5	5.5	7.5	9.5	11.5	15.5	19.5	24.5	29.5
Set point increasing flow (l/min)*	0.5 l/min over the set point decreasing flow															

VT..25..VE (DN 25)																
Switch position	0	1	2	3	4	5	6	7	8	9	A	B	C	D	E	F
Set point decreasing flow (l/min)*	3	5	6	8	10	12	15	18	20	25	30	35	40	50	70	100
Set point increasing flow (l/min)*	5	7	8	10	12	14	17	20	22	27	33	38	44	55	75	105

VT..40..VE (DN 40)																
Switch position	0	1	2	3	4	5	6	7	8	9	A	B	C	D	E	F
Set point decreasing flow (l/min)*	7	10	15	20	25	30	35	40	50	65	80	100	130	160	200	275
Set point increasing flow (l/min)*	10	13	19	24	30	35	40	47	58	75	90	115	150	190	230	310

* The specified values refer to operation with water at 20 °C. Monitoring of fluids with higher viscosities is possible with the effect of deviations from the mentioned values. If you order at least 25 units, individual set point tables can be implemented.

Switching Transmitter, TU 7050

The TU 7050 is a two channel switching transmitter for use with all Turbotron series flow sensors. Pulse signals from flow sensors operate a dual set of galvanically insulated, dry contacts which in turn, may be used to activate alarms. Set point adjustments are allowed, in up to 16 increments, via a pair of rotary switches set into the module's front panel. The rear panel contains the DIN rail mounting assembly. Two selectable modes are available:

Mode A

Two identical turbine flow sensors operate one set point each.

Mode B

One turbine flow sensor operates a pair of alarm set points (pre-alarm & main-alarm or min. & max.).

The TU 7050 provides a failsafe mechanism as any malfunction of the flow sensor would immediately trigger the low flow alarm setting. The set points are very easily adjusted via the very visible, rotary dial settings and additional oversight is offered by 2 LED lights. The red LED will light in a no-flow condition and a green LED indicates flow.

Type TU 7050

Technical data		
Signal input	Frequency signals of up to two identical flow sensors VT...15 VT...25 VT...40	
Display per channel	LED green = ok	LED red = alarm
Set point adjustment	Using two 16-position rotary switches, 16 different set points can be selected per channel	
Set point range		**Hysteresis**
> VT...15	0.5...29.5 l/min	0.5 l/min
> VT...25	3...100 l/min	2...10 l/min
> VT...40	7...275 l/min	3...35 l/min
Outputs	Two independent, potential free c/o contacts	
Max. contact rating	30 VDC / 1 A	150 VAC / 400 mA
Power supply	12...24 VDC ± 10 %	
Casing	Plastic casings for assembly rail setup approx 17,5 x 67 x 85 mm (B x T x H)	
Ambient temperature / storage temperature	0...60 °C / -10...80 °C	

Set points, dimensions and order code

For VT..15 (DN 15)																
Switch position	0	1	2	3	4	5	6	7	8	9	A	B	C	D	E	F
Set point decreasing flow (l/min)*	0.5	1.0	1.5	2.0	2.5	3.0	3.5	4.5	5.5	7.5	9.5	11.5	15.5	19.5	24.5	29.5
Set point increasing flow (l/min)*	0,5 l/min over the set point decreasing flow															

For VT..25 (DN 25)																
Switch position	0	1	2	3	4	5	6	7	8	9	A	B	C	D	E	F
Set point decreasing flow (l/min)*	3	5	6	8	10	12	15	18	20	25	30	35	40	50	70	100
Set point increasing flow (l/min)*	5	7	8	10	12	14	17	20	22	27	33	38	44	55	80	110

For VT..40 (DN 40)																
Switch position	0	1	2	3	4	5	6	7	8	9	A	B	C	D	E	F
Set point decreasing flow (l/min)*	7	10	15	20	25	30	35	40	50	65	80	100	130	160	200	275
Set point increasing flow (l/min)*	10	13	19	24	30	35	40	47	58	75	90	115	150	190	230	310

* The specified values refer to operation with water at 20 °C. Monitoring of fluids with higher viscosities is possible with the effect of deviations from the mentioned values. If you order at least 25 units, individual set point tables can be implemented.

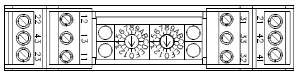

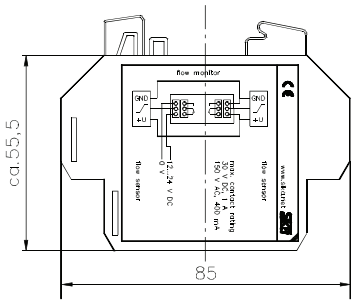

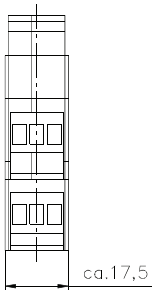

Order example	EU70500	H152296
Type		
TU 7050	EU70500	
Conntected turbine fl ow sensors		
VTH 15		H152296
VTP 15		D152296
VTI 15, NPN		I152296
VTI 15, PNP		P152296
VTH 25 / VTM 25		H252296
VTI 25		P252296
VTH 40 / VTM 40		H402296
VTI 40		P402296